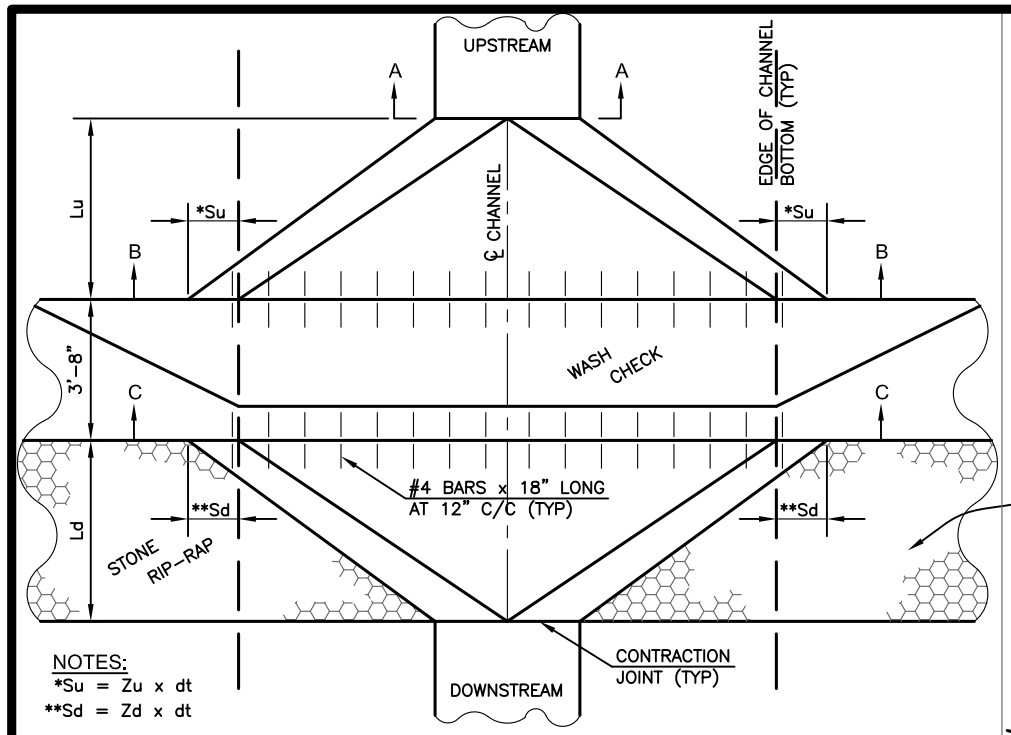

NOTES:
*Su = Zu x dt
**Sd = Zd x dt

PLAN

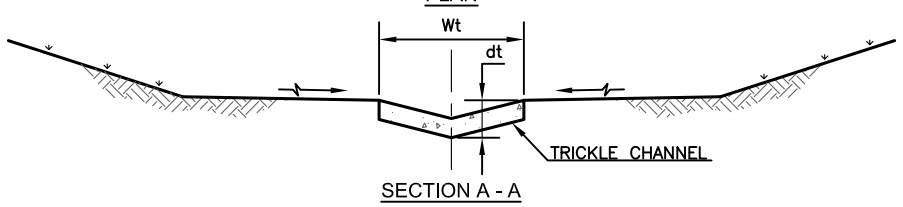

SECTION A - A

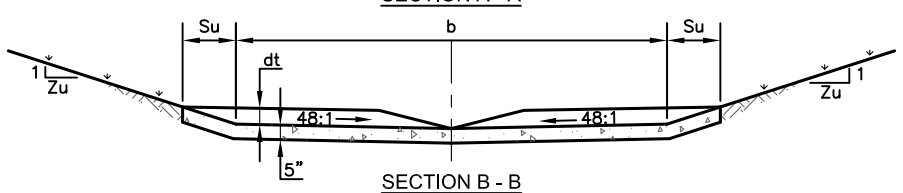

SECTION B - B

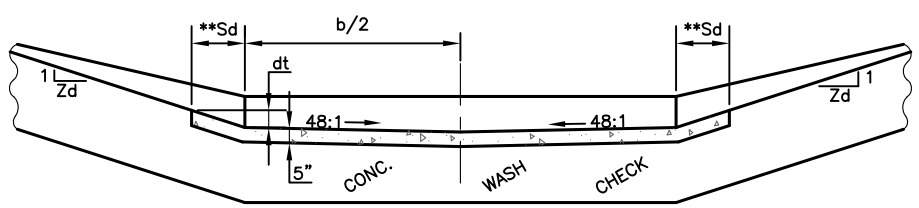

SECTION C - C

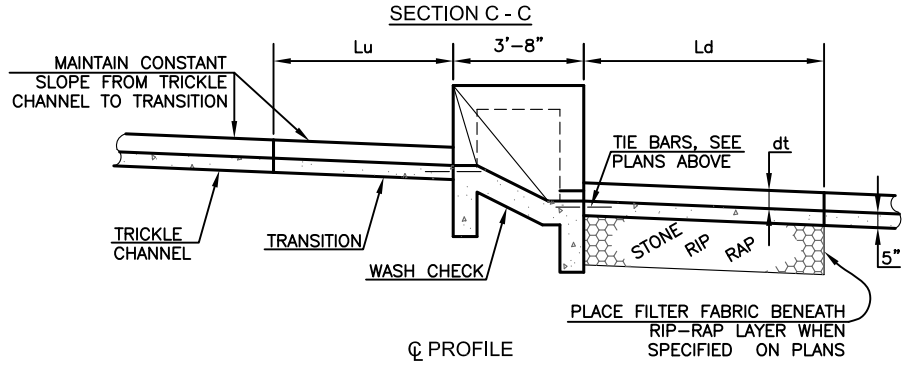

℄ PROFILE

WASH CHECK TO TRICKLE CHANNEL TRANSITION

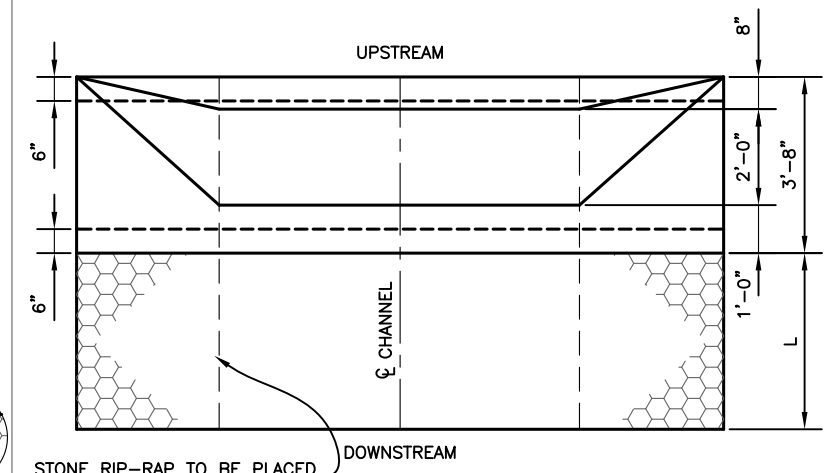

PLAN

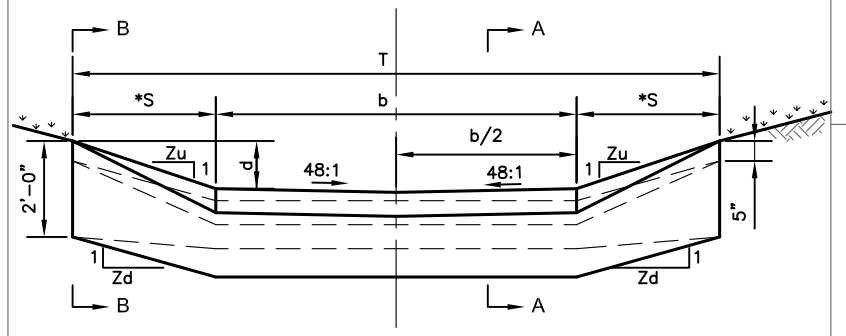

NOTES:
*S = Zu x d

DOWNSTREAM ELEVATION

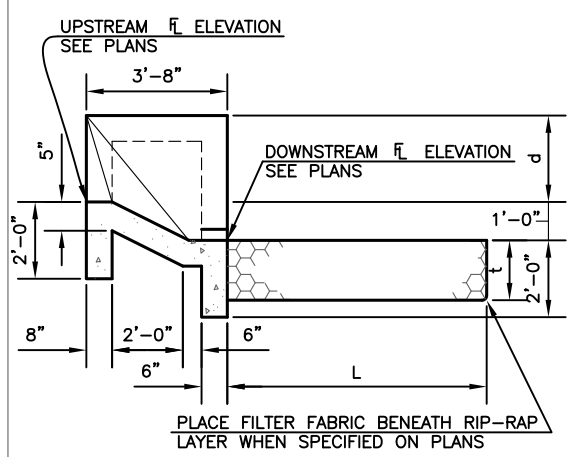

SECTION A - A

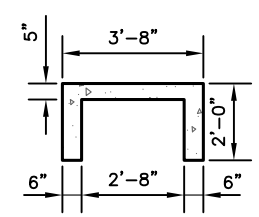

SECTION B - B

CONCRETE WASH CHECK

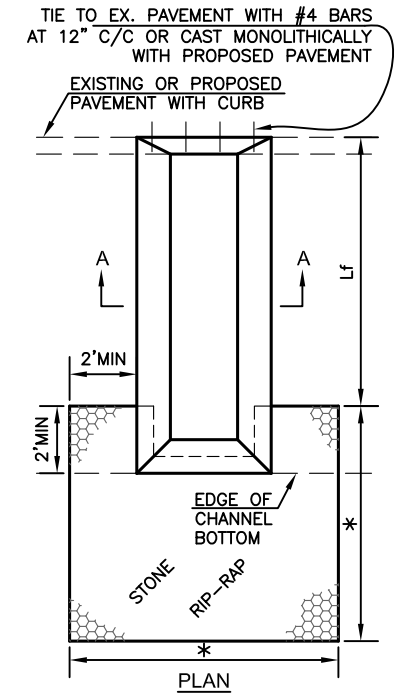

PLAN

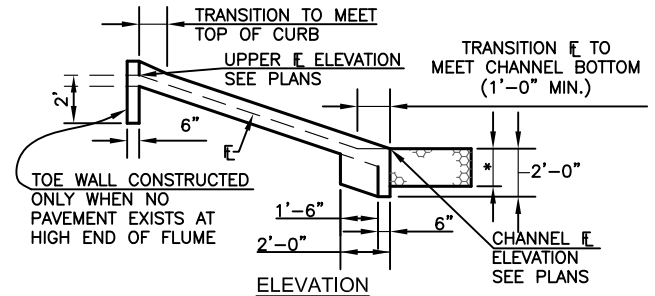

ELEVATION

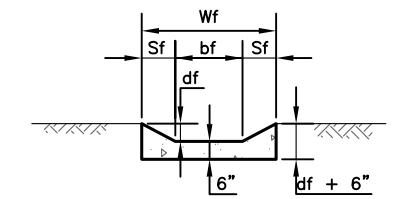

SECTION A - A

*1. REFER TO PLANS FOR SPECIFIC DIMENSIONS OF Wf, df, Lf, Sf & bf FOR EACH FLUME.

2. DIMENSIONS AND THICKNESS OF RIP-RAP AS SHOWN ON PLANS

CONCRETE FLUME

tt MINIMUM SIZE REQUIREMENTS
Wt = 4' (MIN)
dt = 0.5' (MIN)
Z = 4 (MIN)

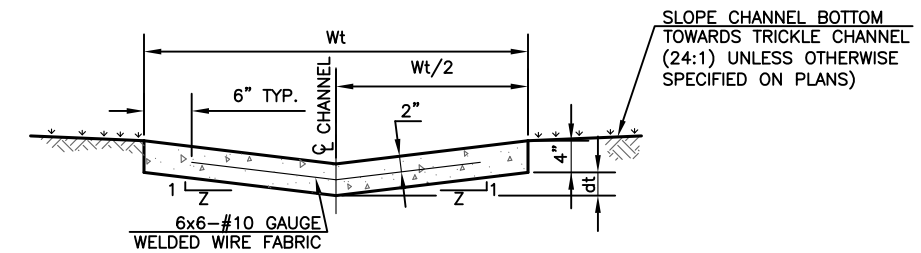

CONCRETE TRICKLE CHANNEL

GENERAL NOTES

1. ALL CONCRETE SHALL BE "PAVEMENT CLASS", IN ACCORDANCE WITH THE STANDARD SPECIFICATIONS.
2. MIXING, PLACING, FINISHING, JOINTING AND CURING OF ALL CONCRETE SHALL BE IN ACCORDANCE WITH THE APPLICABLE PORTIONS OF THE STANDARD SPECIFICATIONS FOR SIDEWALKS, STEPS AND DRIVEWAYS, DEC. 5.8.b.
3. WELDED WIRE FABRIC (WWF 6 x 6 – W2.9xW2.9) SHALL BE USED THROUGHOUT AND CENTERED IN ALL SLABS AND FOOTINGS. WIRE FABRIC SHALL CONFORM TO ASTMA 185.
4. MATERIALS USED FOR STONE RIP-RAP SHALL CONFORM TO THE REQUIREMENTS OF THE KANSAS DEPT. OF TRANSPORTATION STANDARD SPECIFICATIONS, LATEST EDITION. GRADATION FOR EACH CLASS OF RIP- RAP SPECIFIED SHALL BE IN ACCORDANCE WITH THE TABLE ON THE "CHANNEL LININGS" STANDARD DETAIL SHEET.
5. BROKEN CONCRETE RIP-RAP MAY BE SUBSTITUTED FOR STONE RIP-RAP PROVIDED IT MEETS GRADATION REQUIREMENTS FOR THE CLASS OF RIP-RAP SPECIFIED.
6. THE FOLLOWING UNITS OF MEASUREMENT SHALL APPLY TO ALL ITEMS OF WORK DETAILED ON THIS SHEET, UNLESS OTHERWISE SHOWN ON THE PROPOSAL.

CONCRETE WASH CHECK
CONCRETE TRICKLE CHANNEL
CONCRETE TRANSITION
CONCRETE FLUME
— SQUARE FOOT (ACTUAL EXPOSED SURFACE AREA)

STONE RIP-RAP
BROKEN CONCRETE RIP-RAP
— SQUARE YARD, FOR EACH CLASS OF RIP-RAP

WASH CHECK SCHEDULE

WASH CHECK NO. & STATION (SEE PLANS)	T	b	d	Zu	Zd	S	RIP-RAP L	RIP-RAP t

TRICKLE CHANNEL & TRANSITION SCHEDULE

tt TRICKLE CHANNEL			TRANSITION							
STATION FROM - TO	Wt	dt	NO./STA.	b	Lu	Ld	Zu	Zd	Su	Sd

NO.	DATE:	REVISION	BY:	APP'D
1	Feb. 2008	Mod. General Notes	DHS	SB

DRAWN BY: rm/mc
APP'D BY: R. Timothy Kane

SHAWNEE COUNTY, KANSAS
PUBLIC WORKS DEPARTMENT
1515 NW SALINE
TOPEKA, KS 66618
(785) 233-7702

TOPEKA Public Works ENGINEERING
620 SE MADISON St. • 2nd Floor • TOPEKA, KS 66607
Phone: (785) 368-3842 • Fax: (785) 368-3881

STANDARD DETAILS

WASH CHECK, TRICKLE CHANNEL & FLUME
(DT-016)

DATE: _____
SHEET: _____
PROJ.: _____