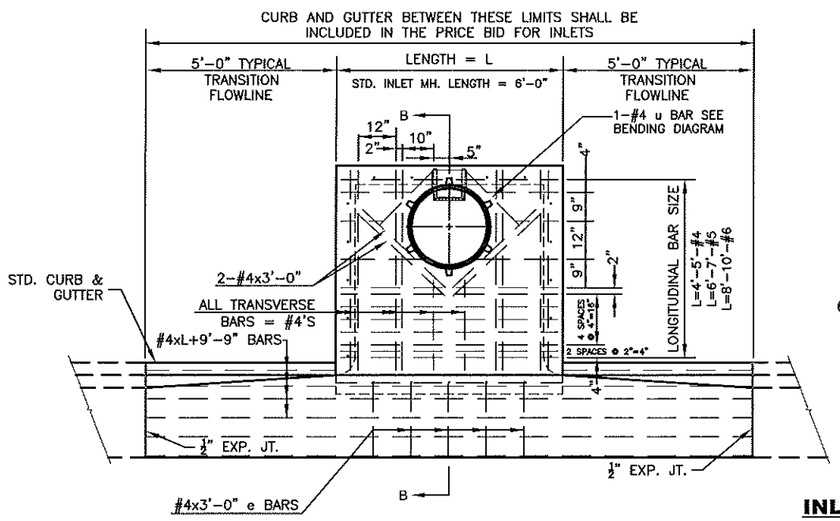

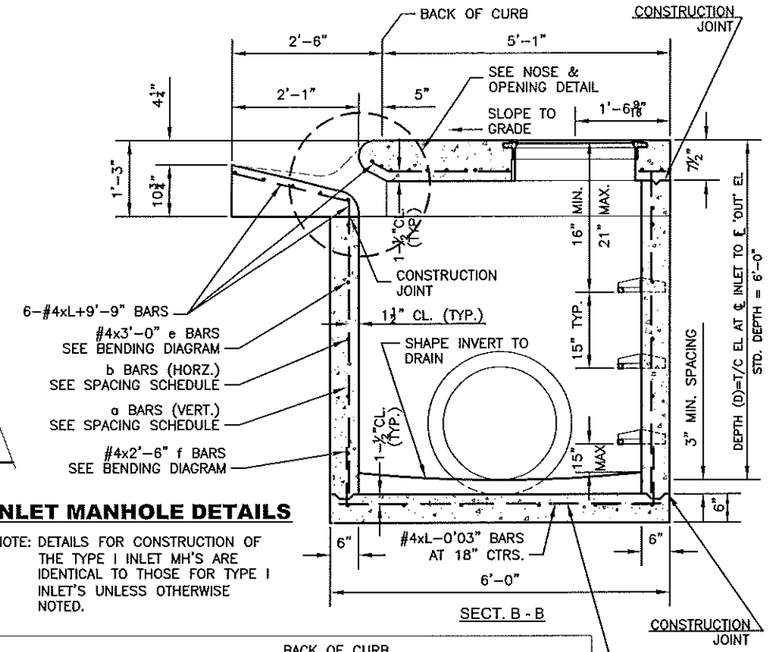

INLET MANHOLE DETAILS

NOTE: DETAILS FOR CONSTRUCTION OF THE TYPE I INLET MH'S ARE IDENTICAL TO THOSE FOR TYPE I INLET'S UNLESS OTHERWISE NOTED.

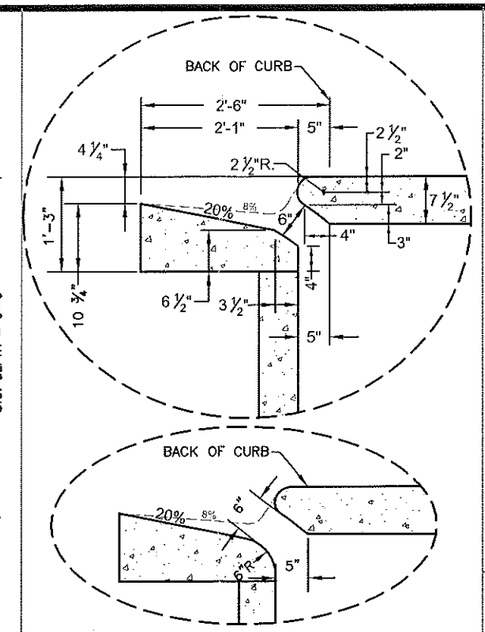

NOSE & OPENING DETAILS

EITHER OPTION MAY BE USED TO OBTAIN 6" OPENING

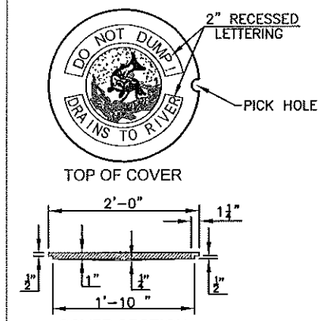

MANHOLE COVER

WT. 69 lbs.

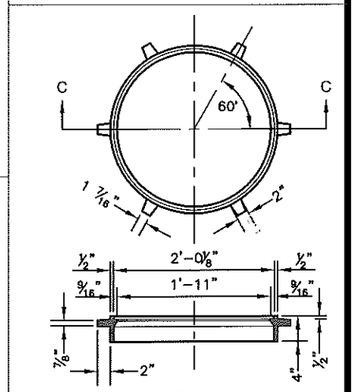

FRAME CASTING

WT. 64 lbs.
CLAY AND BAILEY NO. 3215 OR APPROVED EQUAL.

REINFORCING BAR SPACING SCHEDULE

D	L = 4'		L = 5'		L = 6'		L = 7'		L = 8'		L = 9'	
	a BAR	b BAR	a BAR	b BAR	a BAR	b BAR	a BAR	b BAR	a BAR	b BAR	a BAR	b BAR
3'	12"	18"	12"	18"	12"	18"	12"	18"	12"	18"	12"	18"
4'	18"	12"	12"	18"	12"	18"	12"	18"	12"	18"	12"	18"
5'	18"	12"	18"	12"	12"	18"	12"	18"	12"	18"	12"	18"
6'	18"	12"	18"	12"	18"	12"	12"	18"	12"	18"	12"	18"
7'	18"	12"	18"	12"	18"	12"	18"	12"	12"	18"	12"	18"
8'	18"	12"	18"	12"	18"	12"	18"	12"	18"	12"	12"	18"
9'	18"	12"	18"	12"	18"	12"	18"	12"	18"	12"	18"	12"
10'	18"	12"	18"	12"	18"	12"	18"	12"	18"	12"	18"	12"

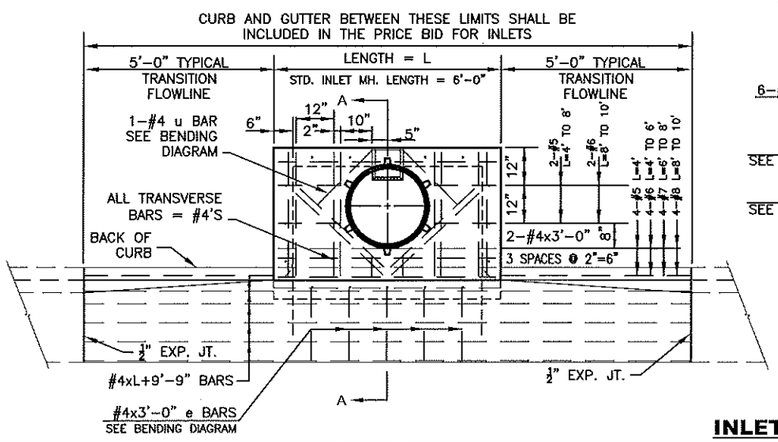

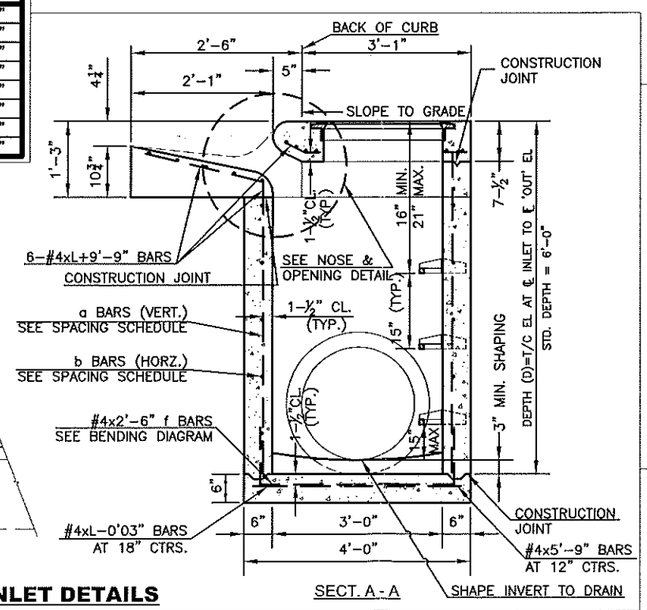

INLET DETAILS

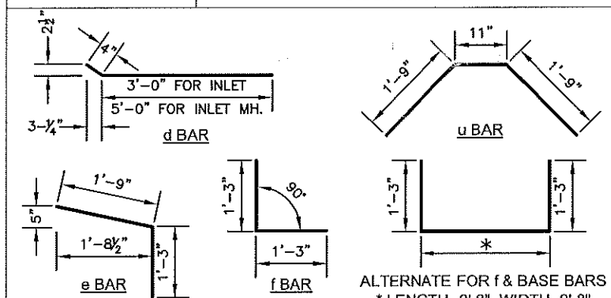

BENDING DIAGRAM

NOTE: THE e & f BARS WILL HAVE THE SAME SPACING AS THE a BARS. THE e & f BARS WILL TIE TO THE a BARS.

INLET SCHEDULE

STATION	LT. OR RT.	INLET (I) or INLET (MH)	L	D	EXTRA DEPTH	a BAR SPACING	b BAR SPACING

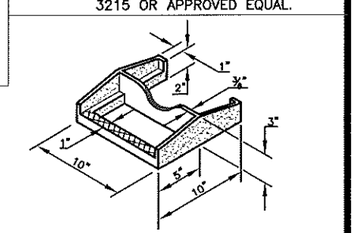

C.I. MH STEP CASTING DETAILS

WT. 11 lbs.

CLOW-NATIONAL NO. F-3650 CLAY AND BAILEY NO. 2113 NEENAH R-1980-E OR EQUAL

COPOLYMER POLYPROPYLENE PLASTIC STEP, PS2-PF, MANUFACTURED BY M.A. IND. INC. OR APPROVED EQUAL MAY BE USED AS AN ALTERNATE TO DETAILED CASTING. THIS STEP MAY BE CAST IN PLACE OR INSTALLED IN ACCORDANCE WITH THE MANUFACTURERS RECOMMENDED INSTALLATION PROCEDURE.

NOTES:

1. ALL TOP SLAB REINFORCING SHALL BE GRADE 60 REBAR.
2. USE CLASS 'A' CONCRETE THROUGHOUT. BEVEL ALL EXPOSED EDGES WITH A 3/4" TRIANGULAR MOLDING.
3. REINF. STEEL BARS IN INLETS OR INLET MH'S SHALL BE INCLUDED IN THE PRICE BID FOR EACH STRUCTURE. BARS TO BE BENT AROUND PIPE.
4. STEPS SHALL BE INSTALLED IN ALL INLETS OVER 4' DEEP AND LOCATED UNDER MANHOLE RING AND COVER.
5. SUPPLIERS SHALL GRIND ALL BURRS SMOOTH ON CASTINGS.
6. STANDARD INLETS AND INLET MANHOLES SHALL BE 6'-0" IN LENGTH UNLESS OTHERWISE SHOWN ON THE PLANS. LONGER OR SHORTER INLETS MAY BE SPECIFIED IN ONE FOOT INCREMENTS, AND ARE TO BE BID PER EACH FOR EACH LENGTH OF STRUCTURE AS SHOWN ON THE PLANS. INLETS OR INLET MANHOLES SHORTER THAN 6'-0" ARE TO BE BID AT THE SAME UNIT PRICE AS THE STANDARD STRUCTURES. UNIT BID PRICES ARE FOR STRUCTURES NOT EXCEEDING A DEPTH (D) OF 6'-0". EXTRA DEPTH SHALL BE PAID FOR AT THE UNIT PRICE BID FOR EXTRA DEPTH FOR EACH LENGTH OF INLET.
7. SEE SHEET ENTITLED "REINFORCING STEEL FOR INLETS AND MANHOLES" FOR DETAILS AND QUANTITIES.
8. ALL REINFORCING STEEL SHALL BE #4 @ 6" CENTERS EXCEPT WHERE NOTED OR DESIGNED BY ENGINEER. MINIMUM CLEAR DISTANCE FOR REINFORCEMENT SHALL BE 1-1/2".

NO.	DATE:	REVISION	BY:	APP'D
3	Sept. 2011	Elim. dim. from Inlet MH & Inlet Details	DHS	SB
2	March 2010	Eliminated keyed joints	DHS	SB
1	Feb. 2008	Mod. MH Cover & Added Notes	DHS	SB

DRAWN BY: rm/mc

APP'D BY: [signature]

SHAWNEE COUNTY, KANSAS
PUBLIC WORKS DEPARTMENT
1515 NW SALINE
TOPEKA, KS 66618
(785) 233-7702

TOPEKA Public Works ENGINEERING
620 SE MADISON St. • 2nd Floor • TOPEKA, KS 66607
Phone: (785) 368-3842 • Fax: (785) 368-3881

STANDARD DETAILS

TYPE I INLETS
(DT-009)

DATE: Month Year
SHEET: X of X
PROJ.: X-XXXXXX.XX